Pre-welded Rebar Supplied to Salit Steel For New Outdoor Crane Runway

Niagara Falls, Ontario

Project:
82-foot Span Crane Runway
Niagara Falls, Ontario
Owner:
Salit Steel Corporation
Niagara Falls, Ontario
Contractors:
Newman Bros. Limited
St. Catharines, Ontario
(Job site layout, supervision, and concrete forming and pouring)
O'Brien's Installations
Stoney Creek, Ontario
(Structural fabrication and erector)
Ryko Electric
Niagara Falls
(Power supply)
Product:
Pre-welded rebar for the concrete footings and piers. And the duct bank reinforcing in two halves (10 foot lengths). Duct cages had pre-welded cross bars for plastic conduit spacing.

Site preparation for placement of pre-welded footings, piers and conduit ducts.

Accompanying constant growth in product demand experienced by Salit Steel Corporation (SSC) in 2004, was the need for additional storage space. To manage this relationship between supply and demand, and to offer a wider selection of beams, Salit commissioned the installation of a new 82-foot span outdoor crane runway. SSC supplied all of the steel to O'Brien's Installations of Stoney Creek, the structural fabrication and erection contractor for the project. Salit Rebar supplied the rebar for the concrete foundations, while StelCrete pre-welded rebar for the concrete footings and piers. Newman Bros. Limited of St. Catharines provided job site layout, supervision, and concrete forming and pouring.

Preparation of the foundation and backfilling work progressed well, even with some poor weather days that occurred in October. By using pre-welded reinforcing assemblies, the contractor was able to make up lost time and more tightly schedule concrete pours.

The teamwork continued when it was time for Ryko Electric to bring power to the new crane runway. The supply lines run almost 300 feet in an underground concrete duct bank from the south-east corner of the rebar shop to the new outdoor crane runway. Because there are heavy trucks that pass over top of the supply lines, the concrete was reinforced.

StelCrete Industries Limited
7771 Stanley Avenue P.O. Box 837 Niagara Falls Ontario L2E 6V6 Canada
T: 905.354.5691 Toll Free: 800.263.7110 F: 905.356.0809 www.stelcrete.com

StelCrete fabricated the duct bank reinforcing in two halves and in 10 foot lengths. The cages even had pre-welded cross bars to ensure the plastic conduit would be spaced away from the bottom of the rebar cage.

Pre-welded cross bars to ensure the plastic conduit would be spaced away from the bottom of the rebar cage.

Installation was simple. The lower cage assembly was placed on concrete bricks, the electrical ducts were placed and secured, the top half of the cage was placed and tied, and the concrete was poured. The next day the trench was backfilled, compacted, and voila; an efficient way to construct underground duct banks.

Pre-welded cage for piers

In all, it was a great effort on the part of everyone in effectively bringing together this important expansion for the Steel Service Centre.

Pre-welded footing and pier reinforcement.

Pre-welded assemblies for electrical duct banks

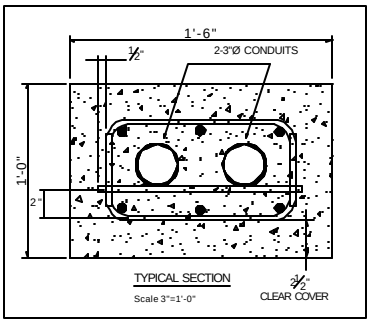

Electrical duct drawing

We reinforce your business…
That's a promise cast in concrete

StelCrete Industries Limited
7771 Stanley Avenue P.O. Box 837 Niagara Falls Ontario L2E 6V6 Canada
T: 905.354.5691 Toll Free: 800.263.7110 F: 905.356.0809 www.stelcrete.com